Diritti riservati All rights reserved

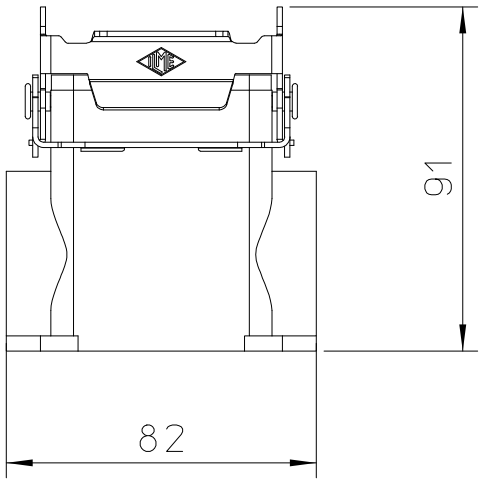

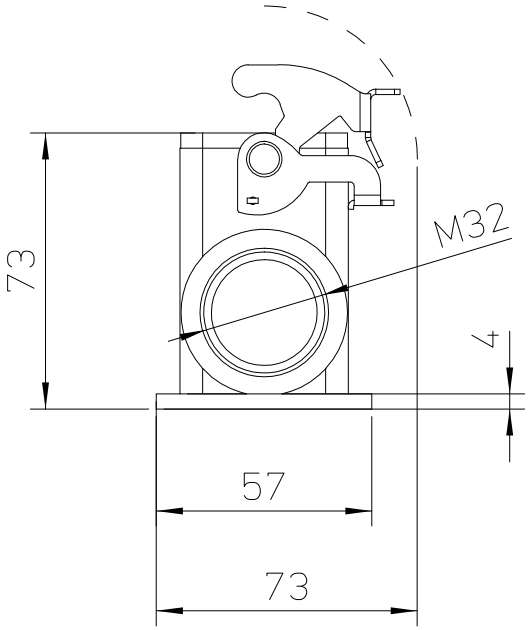

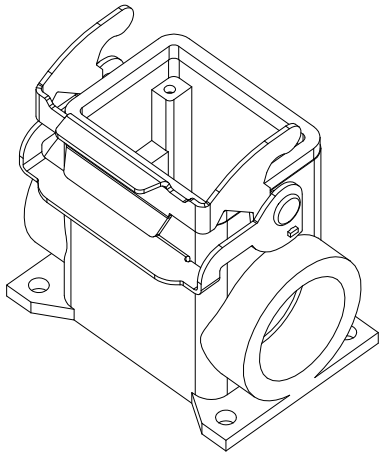

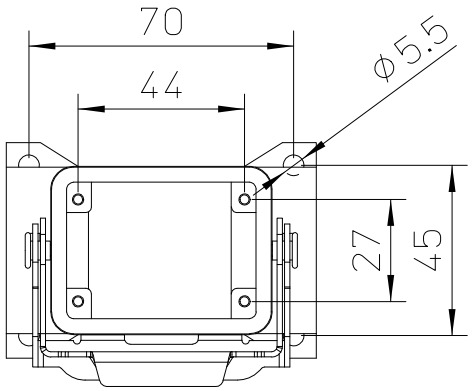

dimensions in mm	M7APE 06 L32	Scale
Date 06/03/17	Surface mounting housing h. , M32, 1 lever E-Xtreme	1:2
Sign. C. Mainini		